Gesipa® FireFox® 2F

Air Rivet Nut Tool for Rivet Nuts up to M12

Gesipa® FireFox® 2F air/hydraulic rivet nut tool is able to install rivet nuts from M3 to M12. Its extremely fast setting speed surpasses the competition. The pressure setting feature automatically adjusts to compensate for different material thicknesses. The tool's long stroke is ideal for installing rivet nuts with larger grip ranges.

Setting Capacity

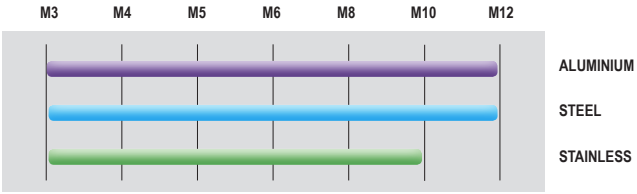

Automatic rivet nut wind on

colour-coded pulling force adjustment for quick and accurate set up

Spring balance attachment

Extremely fast setting cycle (under 2 seconds) with single trigger action for setting and spin-off

GT-FIREFOX-KIT
M3 - M12 (Sold separately)

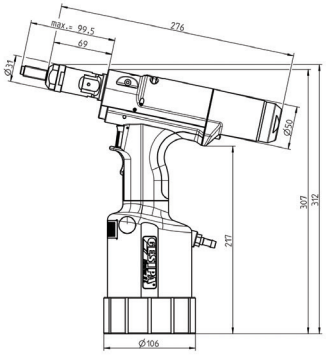

Specifications		Package Accessories
Product Code:	GT-FIREFOX-2F	Includeds mandrels & nosepieces for M4, M5, M6 & M8
Weight:	2.4 kg	rivetnuts (M3, M10 & M12 mandrels and nosepieces sold
Length:	276 mm	separately)
Operating Air Pressure:	5-7 bar	Two double open ended wrenches SW 24/27
Pulling Force (@ 5 bar):	18,500 N	One hex. screw driver SW4
Stroke (max.):	10 mm	One oil refill container, One hydraulic oil bottle 100ml

Dimensions and specifications are subject to change without notice. Check your distributor for the latest data sheet.

Unit 4, 28 Barcoo St., Roseville, NSW 2069
PH: 02 9882 1112
www.rivetlab.com